Assignment-1

1. A *pn* junction in equilibrium condition at temperature T = 250 K has doping concentrations of boron as $10^{13}/\text{mm}^3$ and phosphorus as $0.3 \times 10^{13}/\text{mm}^3$. Calculate the built in voltage developed across the junction, x_n and x_p.

2. For the circuit given below, the diode drop for forward bias condition is V_{DON}=0.7 . Find the current across all the resistors and also the voltages at all the nodes.

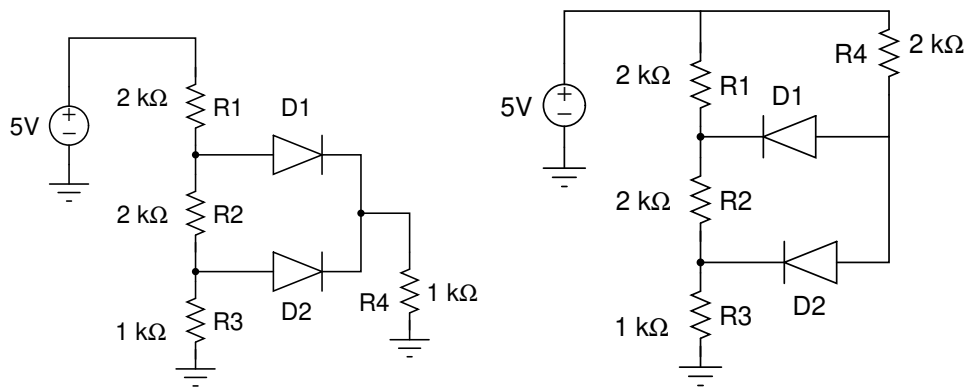

(a) (b)

3. In each of the ideal-diode circuits shown below, v_I is a 1-kHz, 5-V peak sine wave. Sketch the waveform resulting at v_O. What are its positive and negative peak values?

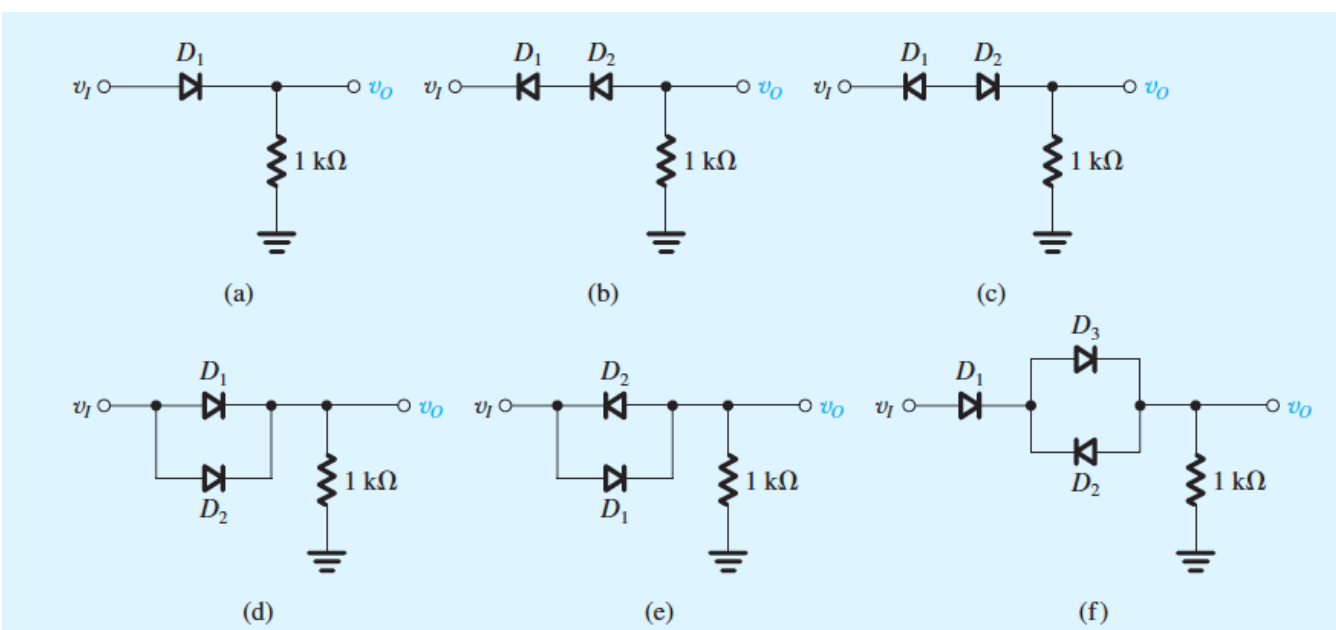

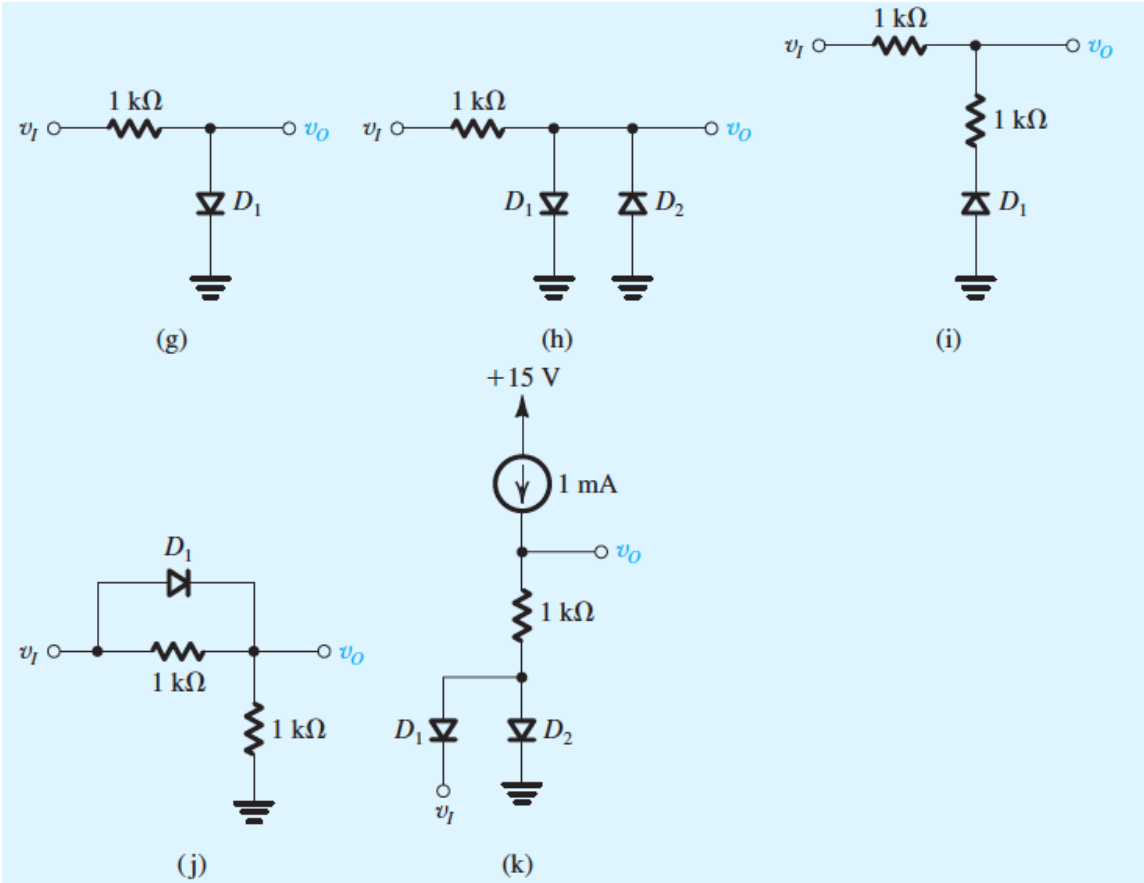

4. Find the values of the labeled voltages and currents.

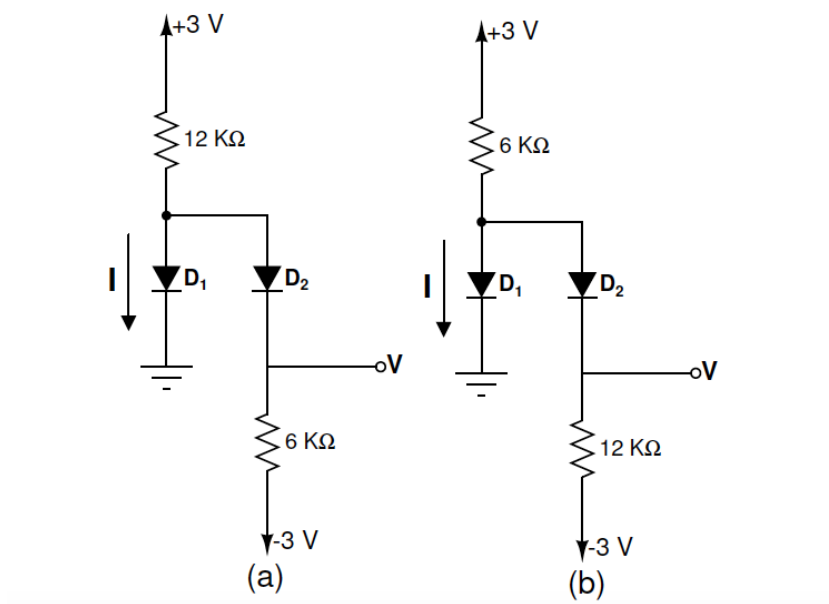

5. Plot the input/output characteristic for the circuit shown below. Assume a constant voltage model for the diode.

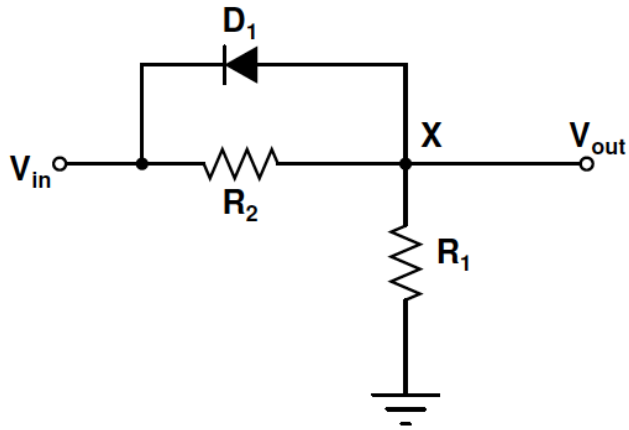

6. It is required to use a peak rectifier to design a dc power supply that provides an average dc output voltage of 12 V on which a maximum of ± 1-V ripple is allowed. The rectifier feeds a load of 200Ω. The rectifier is fed from the line voltage (220 Vrms, 50 Hz) through a transformer. The diodes available have 0.7-V drop when conducting. If the designer opts for the full-wave bridge rectifier circuit:

   (a) Specify the rms voltage that must appear across the transformer secondary.

   (b) Find the required value of the filter capacitor.

   (c) Find the maximum reverse voltage that will appear across the diode, and specify the PIV rating of the diode.

   (d) Calculate the average current through the diode during conduction. (e) Calculate the peak diode current.

7. The zener diode shown in the figure has V_{Z0}=15 V, knee current I_{ZK} = 0.2 mA and r_z= 8 Ω. If the maximum reverse bias current allowed across the zener diode is 50 mA and the supply V_s varies from 20 V to 30 V, find the range of R_S such the zener is breakdown region.

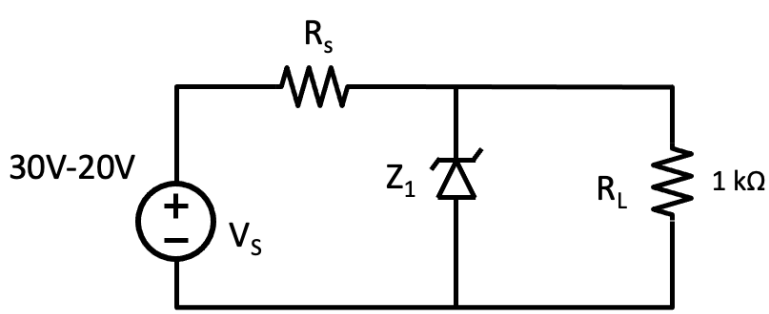

8. In the following circuit, the two zener diodes Z_1 and Z_2 have a breakdown voltage of 3 V and 4 V, respectively. Find the voltage transfer characteristic of the circuit if

$R_1 = R_2 = 1$ kΩ. Draw the output waveform if the input is a sinwave with an amplitue of 5 V. (Note: in forward bias condition, both the zener diodes have a $V_{D(on)}$ =0.7 V and assume r_z to be negligible.)

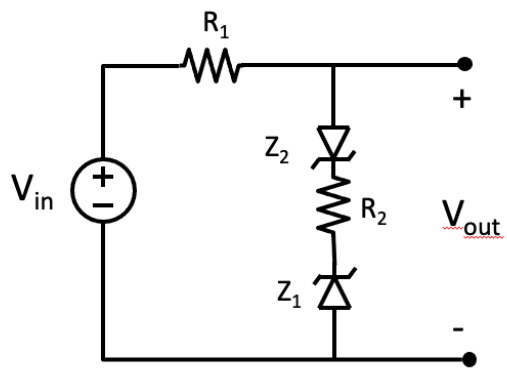
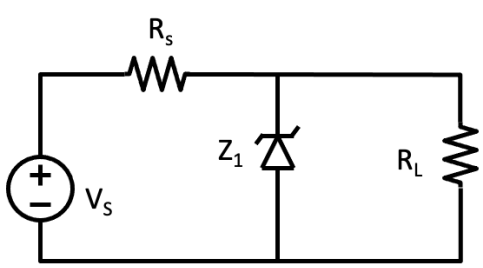
9. The zener diode shown in the figure has V_{Z0}=15 V, knee current I_{ZK} = 0.2 mA and r_z= 8 Ω. If the maximum reverse bias current allowed across the zener diode is I_{ZM}= 50 mA and the supply V_s is fixed at 20 V. The engineer who has designed it has R_S between 80 Ω and 200 Ω and forgotten the exact value he has used. What range of load resistance R_L value would you suggest to your customer such the zener is not spoilt but at the same time it is in breakdown region.